KM 800

Uni Pro™ Seat & Suspension

K&M Manufacturing

Two-Tone Gray Fabric
PN: 8431

MADE IN THE USA

KAB Seating

Adjustable backrest extension for extra height on back

Adjustable armrests fold up and out of the way allowing easy access to the seat and individual comfort

2.9" seat height adjustment for individual fit

Slide rails provide 5.9" fore/aft adjustment ensuring operator comfort

Adjustable lumbar support for lower back comfort

30° - 72° backrest angle adjustment ensuring operator comfort

20° swivel with rotation in either direction

Durable rubber molded suspension cover keeps suspension components free of dirt and dust

- **KAB 81E6 Seat**
- Heavy-duty high performance mechanical suspension
- Low back seat for easy rear view
- 6.3" vertical suspension stroke
- 2" fore/aft impact isolation to absorb jarring for extra comfort
- Ride indicator for best suspension setting
- Mounting patterns include (W x L) 10.25" x 9.7" - 10.45"

See **REVERSE** for applications, drawings and options.

TRACTORSEATS.com CONSTRUCTIONSEATS.com

800-328-1752
308 NW 2nd Street • Renville, MN 56284

APPLICATIONS

Industrial, Mini Excavators, Telehandlers and Wheel Loaders.

Fits - Case® Road Graders: 845, 845B, 865, 865B, 885, 885B

Case® Wheel Loaders: 321D, 321E, 521D, 521E, 621C, 621D, 621E, 721C, 721D, 721E, 821C, 821E, 921C, 921E

Replaces Case® Numbers 2813985, 399257A1, 399261A1

FRONT VIEW

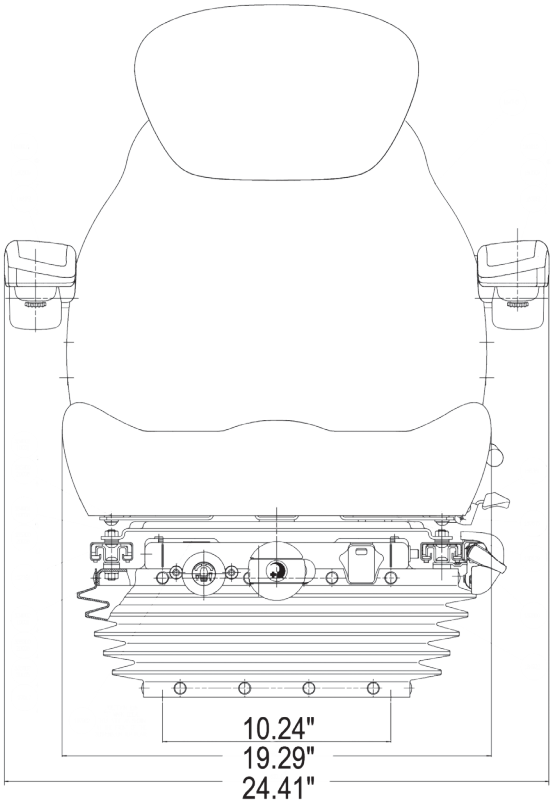

SIDE VIEW

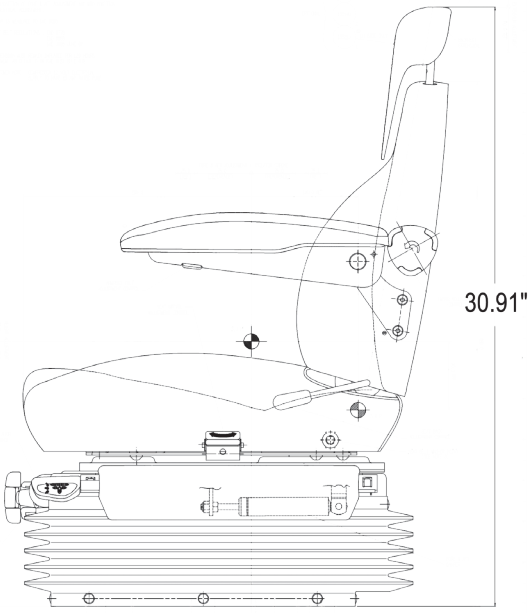

K&M Manufacturing